Available online at www.sciencedirect.com
ScienceDirect
Cancer Letters 266 (2008) 60–72
CANCER Letters
www.elsevier.com/locate/canlet

Mini-review

DNA repair of oxidative DNA damage in human carcinogenesis: Potential application for cancer risk assessment and prevention

Tamar Paz-Elizur, Ziv Sevilya, Yael Leitner-Dagan, Dalia Elinger, Laila C. Roisman, Zvi Livneh *,[1]

Department of Biological Chemistry, Weizmann Institute of Science, Rehovot 76100, Israel

Received 31 January 2008; received in revised form 31 January 2008; accepted 11 February 2008

Abstract

Efficient DNA repair mechanisms comprise a critical component in the protection against human cancer, as indicated by the high predisposition to cancer of individuals with germ-line mutations in DNA repair genes. This includes biallelic germ-line mutations in the *MUTYH* gene, encoding a DNA glycosylase that is involved in the repair of oxidative DNA damage, which strongly predispose humans to a rare hereditary form of colorectal cancer. Extensive research efforts including biochemical, enzymological and genetic studies in model organisms established that the oxidative DNA lesion 8-oxoguanine is mutagenic, and that several DNA repair mechanisms operate to prevent its potentially mutagenic and carcinogenic outcome. Epidemiological studies on the association with sporadic cancers of single nucleotide polymorphisms in genes such as *OGG1*, involved in the repair of 8-oxoguanine yielded conflicting results, and suggest a minor effect at best. A new approach based on the functional analysis of DNA repair enzymatic activity showed that reduced activity of 8-oxoguanine DNA glycosylase (OGG) is a risk factor in lung and head and neck cancer. Moreover, the combination of smoking and low OGG activity was associated with a higher risk, suggesting a potential strategy for risk assessment and prevention of lung cancer, as well as other types of cancer.
© 2008 Published by Elsevier Ireland Ltd.

Keywords: 8-Oxoguanine; Oxidative stress; OGG1; Early detection; DNA repair enzymatic activity; Functional DNA repair assay

1. Introduction

The multiple biochemical reactions in which oxygen is involved lead to the formation of reactive toxic intermediates that may cause DNA damage. Indeed, while life depends on oxygen, it also depends on the activity of sophisticated mechanisms that have evolved to detoxify potentially dangerous reactive oxygen species (ROS),

Abbreviations: BER, base excision repair; 95% CI, 95% confidence interval; HCR, host-cell reactivation; NER, nucleotide excision repair; NSCLC, non-small cell lung cancer; PBMC, peripheral blood mononuclear cells; ROS, reactive oxygen species; SNP, single nucleotide polymorphism.

* Corresponding author. Tel.: 972 8 934 3203; fax: 972 8 934 4169.
E-mail address: zvi.livneh@weizmann.ac.il (Z. Livneh).

[1] Incumbent of The Maxwell Ellis Professorial Chair in Biomedical Research.

0304-3835/$ - see front matter © 2008 Published by Elsevier Ireland Ltd.
doi:10.1016/j.canlet.2008.02.032

and repair oxidative DNA damage once it was formed in DNA. Because oxidative damage to DNA can cause mutations, and mutations are known to cause cancer, much effort has been devoted to study the role in carcinogenesis of oxidative DNA damage, its prevention, and repair [1,2]. The pivotal role that DNA repair plays in defending humans against cancer became evident with the accumulation of studies showing that many of the human hereditary cancer predisposition diseases are caused by germ-line mutations in DNA repair genes [2–9]. Interestingly, even in these cases, although the DNA repair defect is present in all cell types, cancer is limited to certain tissues, underscoring the notion that a deficiency in a particular repair gene in itself is not sufficient to cause cancer. Additional major factors are involved, including the level of DNA damage generated in a particular tissue, and the activity of other protection mechanisms at both the molecular and cellular levels, such as alternative DNA repair pathways, apoptosis, and the immune system.

In contrast to hereditary cancer, our molecular understanding of the role of DNA repair in sporadic cancer, which accounts for most cancer cases in humans, is limited, as the translation of the wealth of molecular understanding of basic DNA repair mechanisms into human cancer has been slow. A major cause is that in contrast to germ-line mutations in DNA repair genes, which cause a strong deficiency in DNA repair activity in all cell types, in sporadic cancer, where there is no germ-line mutation, deficiencies in DNA repair, if any, are expected to be much milder. This makes research on the role of DNA repair in sporadic cancer much more difficult. Further slowing down progress are the paucity of accurate and reproducible assays suitable for epidemiological studies, poor epidemiological design of many studies, and a rather low activity in translational research of investigators in the field of basic research in DNA repair. Recently significant progress was made on the role of oxidative damage repair in human cancer, as more reliable DNA repair assays are being developed, and studies conformed to more careful epidemiological criteria. This review will focus on the role in human cancer of the repair of a specific type of oxidative DNA damage, 8-oxoguanine. This damage, which is mutagenic, is one of the major oxidative DNA lesions, and frequently taken as a measure of oxidative stress [1].

2. Mechanisms of repair of DNA containing 8-oxoguanine

8-Oxoguanine is formed in DNA by one of two main mechanisms: (a) oxidation of a guanine base in DNA [10]; (b) incorporation of an oxidized dGTP (8-oxo-dGTP) during DNA synthesis [11]. The mutagenicity of 8-oxoguanine stems from its propensity to form a mispair with A, which can lead to a GC → TA transversion if a dAMP moiety is inserted opposite a template 8-oxoguanine, or an AT → CG transversion if 8-oxo-dGMP is inserted opposite a template A [11–14]. The deleterious effects that 8-oxoguanine may have on life can be clearly deduced from the existence of multiple mechanisms that have evolved to neutralize it. Thus, organisms from bacteria to humans have no less than three dedicated mechanisms, as well as at least two backups, which protect them from 8-oxoguanine. The main protective mechanisms operate at three levels (Fig. 1): (a) Prevention – to avoid the incorporation of 8-oxo-dGMP in DNA by hydrolysis of 8-oxo-dGTP. This reaction is catalyzed by the enzyme MTH1. (b) Repair – to excise 8-oxoguanine from DNA and restore the original DNA sequence. This is carried out primarily by OGG1-initiated base excision repair (BER). (c) Proofreading – to remove an adenine misincorporated opposite a template 8-oxoG in order to enable conversion of the pre-mutagenic 8-oxoG:A mispair into a 8-oxoG:C base pair. This reaction is carried out by MUTYH-initiated BER. The 8-oxoG:C base pair can subsequently be repaired by OGG1-initiated BER to restore the G:C base pair.

2.1. Prevention

8-Oxo-dGTP can be used as a substrate by DNA polymerases during DNA synthesis, leading to the incorporation of 8-oxo-dGMP. This occurs opposite a template C, but also opposite template A, thereby forming a pre-mutagenic intermediate A:8-oxoG mispair (Fig. 1; [11,14]). The MTH1 protein acts to limit this reaction by hydrolyzing 8-oxo-dGTP to 8-oxo-dGMP, thereby eliminating it from the pool of DNA synthesis precursors. The *MTH1* gene is located on chromosome 7p22. It consists of 5 exons, and can produce up to seven types of mRNA as a result of multiple initiation sites and alternative splicing. Type 1 mRNA and the 18 kDa protein variant are the major products of *MTH1* [15]. The enzyme hydrolyzes also two oxida-

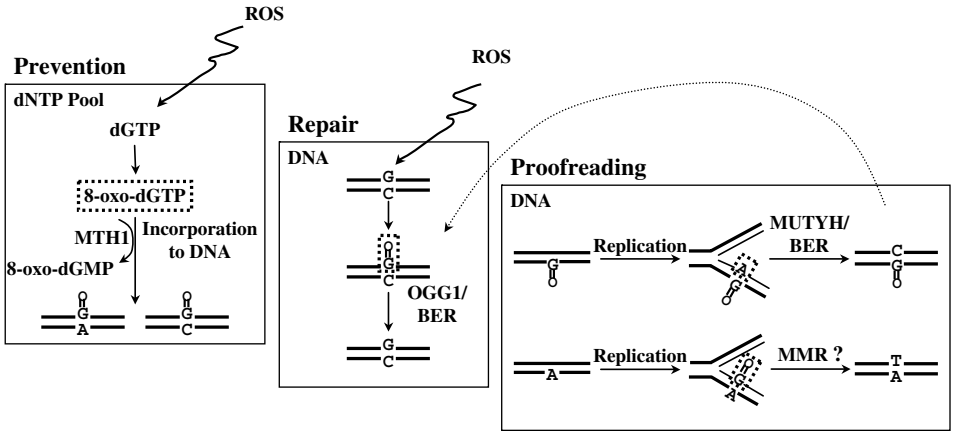

Fig. 1. The major protective mechanisms against the oxidative DNA lesion 8-oxoguanine. Prevention, involves MTH1-catalyzed hydrolysis of 8-oxo-dGTP, to prevent its incorporation into DNA by DNA polymerases during DNA synthesis. Repair, involves OGG1-initiated base excision repair (BER), which repairs the 8-oxoG:C base pair to the original G:C base pair. Proofreading operates on the 8-oxoG:A mispair. When A is in the newly synthesized DNA strand, it is eliminated by the MUTYH adenine DNA glycosylase, thereby enabling the formation of a 8-oxoG:C base pair that can be repaired by OGG1-initiated BER. When the A is in the template strand, the 8-oxoG might be removed by mismatch repair (MMR). See text for details.

tion products of dATP, namely 2-hydroxy-dATP and 8-oxo-dATP, and to a lesser degree also the oxidized rGTP [16,17]. Interestingly, humans contain an enzyme related to MTH1, termed NUDT5. This enzyme, originally known as ADP-sugar pyrophosphatase, was found to effectively hydrolyze 8-oxo-dGDP. 8-Oxo-dGDP is formed by enzymatic cleavage of 8-oxo-dGTP and by oxidation of dGDP, and although it is not a substrate for DNA polymerases, it can be easily converted into the triphosphate form by nucleoside diphosphate kinase [18].

2.2. Repair

8-Oxoguanine present in DNA as part of an 8-oxoG:C base pair can be produced by oxidation of a guanine in DNA, or when residual 8-oxo-dGTP, which has escaped the MTH1-catalyzed hydrolysis, incorporates opposite a template C. In that case, the 8-oxoguanine is removed from DNA by BER (Fig. 1), a key DNA repair mechanism that operates usually on bases with small modification, including many oxidative DNA lesions. BER is initiated by a DNA glycosylase that recognizes the modified base, and eliminates it from DNA by cleaving the glycosylic bond linking the base to the deoxyribose sugar in the DNA backbone, leaving behind an abasic site. Approximately 10 different DNA glycosylases are known in mammalian cells, each operating on a small group of chemically related base modifications. Some DNA glycosylases have an associated AP lyase activity, which cleaves the abasic site, whereas others lack it [1,19–21]. 8-Oxoguanine is removed primarily by 8-oxoguanine DNA glycosylase 1 (OGG1), which possesses an associated AP lyase activity [22,23]. Subsequent DNA repair steps are generally common to all BER sub-pathways, and involve the activity of AP endonuclease 1, DNA polymerase β, and DNA ligase III or I, although the precise mechanism slightly differs for DNA glycosylases without an associated AP lyase activity [1,24]. Interestingly, AP endonuclease I stimulate the enzymatic activity of OGG by actively increasing its turnover [25,26]. Another DNA glycosylase that can excise 8-oxoguanine from DNA is NEIL1, but its activity is rather weak [27,28]. Remarkably, while OGG1 acts on 8-oxoguanine in dsDNA, NEIL1 acts on 8-oxoguanine also in ssDNA segments of bubble DNA substrates, suggesting that it may function during BER linked to transcription or replication [29]. The NEIL1-dependent pathway does not require APE1, but requires polynucleotide kinase instead, for processing the intermediate formed by the DNA glycosylase and AP lyase activities of NEIL1 [30]. There is evidence to suggest that nucleotide excision repair (NER) might act as a backup for the repair of 8-oxoguanine [31].

2.3. Proofreading

An A inserted opposite 8-oxoG gives rise to an 8-oxoG:A mispair, which is not a target for OGG1 [32], most likely to avoid a situation in which the erro-

neous A is used as a template, thereby establishing a GC → TA mutation. Instead, a special adenine DNA glycosylase, MUTYH (MutY homolog; previously termed MYH), identifies the 8-oxoG:A base pair, and removes the A rather than the oxidized G (Fig. 1; [33–35]). This might seem strange at first glance, since the action of MUTYH must be followed by DNA synthesis across 8-oxoG in the template strand, which is potentially mutagenic. However, synthesis across 8-oxoG has a chance of at least 80% to insert a C opposite 8-oxoG [36–38]. If this happens, OGG1 can make an additional attempt of error-free removal of the 8-oxoG. In 20% of the cases when 8-oxoG miscodes and an A is inserted again, MUTYH will act again [33,38]. Interestingly, MUTYH was found to excise from DNA also 2-hydroxyadenine, another type of oxidative lesion [39], suggesting that its function may be broader than the removal of A from 8-oxoG:A mispairs. The *MUTYH* gene contains 16 exons, and is localized on the short arm of chromosome 1, between p32.1 and p.34.3. It produces up to 10 alternatively spliced transcripts, and encodes multiple forms of the enzyme, which are targeted to both the mitochondria and the nucleus [40]. Interestingly, MUTYH activity is replication-coupled [41], and the enzyme directly interacts with a number of DNA replication and DNA repair proteins, including the DNA sliding clamp PCNA (proliferating cell nuclear antigen), the AP endonuclease APE1 (HAP1), the ssDNA-binding protein RPA (replication protein A), and the mismatch repair protein MSH6 [40]. When 8-oxoG is inserted opposite a template A, the action of MUTYH might cause a fixation of an AT → CG mutation. Although it is not clear yet whether this indeed happens in humans, it is possible that under such circumstances mismatch repair removes the 8-oxoguanine from DNA [42–44].

3. Repair of 8-oxoG and carcinogenesis in mice

Each of the three main genes involved in the protection against 8-oxoguanine was knocked out in mice, providing a powerful tool for molecular analysis of their in vivo activity, as well as their involvement in carcinogenesis. Somewhat surprisingly, no drastic phenotypes were observed in either of the $MTH1^{-/-}$, $OGG1^{-/-}$, or $MUTYH^{-/-}$ knockout mice (recently reviewed in [45,46]). Thus, $OGG1^{-/-}$ mice showed an abnormal twofold increase in the amount of chromosomal 8-oxoguanine, and increased spontaneous mutagenesis. However, the effect on tumorigenesis was marginal: Two studies did not find an effect on spontaneous carcinogenesis, whereas one study reported spontaneous development of lung cancer 1.5 years after birth [47–49]. $MUTYH^{-/-}$ mice were reported to have no effect on spontaneous tumor incidence when examined 15–17 months after birth in one study [50], while in another study they were reported to have an overall 1.7-fold in spontaneous tumors, and a more pronounced 5-fold increase in the incidence of intestinal tumors 18 months after birth [51]. $MTH1^{-/-}$ mice showed a marginal increase in general spontaneous mutagenesis, and a significant 5.7-fold increase in single nucleotide frameshifts in mononucleotide runs. When examines 18 months after birth, they were found to have more tumors in the lung, liver and stomach compared to $MTH1^{+/+}$ mice [52].

The overall picture that emerges from these studies in mice is that while defects in the main enzymes involved in the repair of 8-oxoguanine do facilitate spontaneous carcinogenesis, the effects are rather mild and occur late in life. This is somewhat surprising given the abundance of 8-oxoguanine and its known mutagenic effects. A possible obvious explanation is that there exist backup mechanisms that act to minimize the effect of 8-oxoguanine in these knockout mice. Indeed, a DNA repair pathway that depends on the Cockayne syndrome gene CSB but not on OGG1 was described [53,54]. In addition, the mismatch repair system might be involved in the repair of 8-oxoguanine, as described above [42,43]. These results highlight the importance of mice model systems as extremely powerful tools in the elucidation of molecular mechanisms for the repair of 8-oxoguanine (and, of course, other types of DNA damage). On the other hand, as far as carcinogenesis is involved, there are major differences between mice and humans in the effects of specific DNA repair enzymes. These differences might reflect the difference in the life span of mice and humans: whereas mice evolved to live approximately 2 years, human live 40- to 50-fold longer. Therefore, deficiencies in the repair of DNA lesions, which may not have a strong effect in mice during their short life span, may in fact have a dramatic effect on human cancer susceptibility as will be discussed below.

4. Repair of 8-oxoguanine and hereditary cancer in humans

Germ-line mutations in DNA repair genes operating in several pathways were found to cause very

strong predisposition to hereditary forms of cancer [1,55]. These include genes involved in nucleotide excision repair (predisposition to skin cancer), mismatch repair (predisposition to hereditary colorectal cancer), non-homologous end joining (e.g., predisposition to lymphoma), and homologous recombination repair (e.g., breast cancer) [2–9]. As far as the main pathways involved in the repair of 8-oxoguanine, germ-line biallelic mutations in the *MUTYH* gene were found to cause *MUTYH*-associated polyposis (MAP), a disease that causes strong predisposition to a hereditary form of colorectal cancer [5,56,57]. This was discovered in a family with several members showing clinical symptoms of familial adenomatous polypolsis (FAP), usually caused by germ-line in the *APC* gene. In this family, however, *APC* mutations were found in the tumor, but not in the germ-line. An unusually high proportion of the somatic *APC* mutations were GC → TA transversion, characteristic to deficiencies in the repair of 8-oxoguanine, as described above. DNA sequence analysis has revealed the presence of biallelic mutations in *MUTYH* [5]. Based on this and subsequent studies MAP is responsible for approximately 1% of all colorectal cancer cases. MAP is the first, and so far only case of cancer caused by a germ-line mutation in a gene belonging to the BER pathway. So far no germ-line mutations in OGG1 or MTH1 were identified in human cancer. While additional studies may reveal germ-line mutations in OGG1 and/or MHT1, the existence of backup mechanisms for the repair of 8-oxoguanine which is part of a 8-oxoG:C base pair may ameliorate repair deficiencies caused by mutations in these genes. Alternatively, the *OGG1* and/or *MTH1* genes may be essential in humans.

5. Repair of 8-oxoguanine and sporadic cancer in humans

In sporadic cancers, which account for a large majority of human cancer, there is no single germ-line mutation that causes a strong predisposition. Rather, a multitude of genetic and environmental components cooperate to form cancer. This together with the obvious limitations of conducting experiments in humans makes research of the genetic origins of sporadic human cancer much more difficult. Moreover, the enormous inter-individual variation in essentially each parameter, from genetic, via biochemical, up to environment and lifestyle parameters, necessitates extra precaution in the design and interpretation of studies. Most experiments are correlative in nature, and therefore it is not easy to unambiguously identify causality when dealing with attempts to identify the involvement of DNA repair in sporadic cancer. Two main issues need to be considered in the investigation of the role of DNA repair in cancer: (a) Are inter-individual variations in DNA repair capacity manifested in the risk to develop sporadic cancer, and (b) How do variations in DNA repair affect the growth of transformed cells on its path to become a cancer cell, and how are they manifested in disease prognosis and response to therapy. The two major approaches that have been utilized to study these issues are the genetic approach based on single nucleotide polymorphisms in DNA repair genes, and the functional assay approach.

5.1. Genetic polymorphisms in DNA repair genes

The existence of millions of polymorphisms in the human genome sparked the hope that these DNA sequence variations are at the basis of inter-individual variations, and will be useful for risk assessment of diseases, including cancer [58]. Translating this approach to the role in cancer etiology of DNA repair of oxidative damage such as 8-oxoguanine, many studies have undertaken to identify SNPs in DNA repair genes, and examine whether they are associated with cancer risk. The most common SNP studied in the *OGG1* gene is *OGG1*-Ser326Cys. Analysis of the biochemical properties of the purified OGG1Ser326Cys variant enzyme led to conflicting results. Dherin et al. reported that the wild-type and variant OGG proteins have similar enzymatic propertied [59], while Hill and Evans [60] reported that the variant OGG1 is deficient in its catalytic activity, appeared in an atypical dimeric form, and unlike the native enzyme, was not significantly stimulated by the presence of AP endonuclease. To add to the confusion, Janssen et al. reported that the excision activity of OGG1 in protein extracts prepared from human lymphocytes was not affected by the Ser326Cys polymorphism [61]. Finally, Luna et al. reported that unlike the wild-type enzyme, the variant OGG1 did not translocate to the nucleoli during the S phase of the cell cycle, most likely due to a change in its phosphorylation status [62]. Taken together these reports underscore the difficulty that may arise in the apparently straightforward task of evaluating the functional significance of a variant protein.

Epidemiological studies addressing the association between the *OGG1*Ser326Cys polymorphism and cancer similarly led to conflicting results. A meta-analysis of studies published until 2005 on the association of the *OGG*Ser326Cys SNP and lung cancer, which combined data from 7 studies, yielded an odds ratio 1.24 (95% CI 1.01–1.53). Combining three studies on upper aerodigestive tract cancers, they found an odds ratio of 1.15 (95% CI 0.90–1.46) [63]. A later large study found no association between this polymorphism and lung cancer in Denmark [64]. Studies on polymorphism in other genes involved in BER of oxidative DNA damage, such as *APE1* or *XRCC1*, similarly yielded either weak or no associations [63,65]. These results suggest that SNPs are too simple to be reliable predictors of complex traits such as cancer risk. Moreover, in most cases they may not even be significant determinant of activity in vivo, because they are only one of many factors that affect gene expression and protein activity. A better approach may be to evaluate the role of SNPs in multiple DNA repair genes [66,67]. However, this approach might be limited by the small number of individuals who are affected by multiple SNPs in DNA repair genes.

5.2. Functional DNA repair assays

Determining of DNA repair activity has an obvious advantage over SNP analysis, since it measures the actual capacity of a particular repair activity. There are three main obstacles to using such an approach: (1) The assays are usually more complex than genotyping. (2) The needs to use a surrogate tissue (usually blood), necessitates to demonstrate the relevance of the results obtained to the actual target tissue. (3) In retrospective studies, which are a critical research methodology in these studies, it is difficult to discriminate between cause and result [68]. In other words, when groups of cancer patients and healthy individuals are compared, a lower DNA repair capacity in the cancer patients can be interpreted either by predisposition, or an effect of the cancer. This last limitation does not exist in prospective studies. All three difficulties, namely complexity, location, and timing do not exist in genotyping: The assay is very simple and high throughput, and because SNPs are in the germ-line, it is clear that they have preceded the tumor, and are present in the target tissue. This explains why genotyping is so popular, however, it is often ignored that in general, SNPs are too simple to be significant predictors of in vivo activity, and even less so, of cancer risk. Recently several studies on the role of the repair of oxidative DNA damage in cancer etiology took the functional approach, yielding exciting results [69–73].

5.2.1. Low OGG activity is associated with the risk of lung and head and neck cancer

The activity of the enzyme OGG1 can be conveniently assayed in protein extracts prepared from peripheral blood mononuclear cells (PBMC), which are mostly lymphocytes [73]. We and others have used a synthetic duplex oligonucleotide carrying a site-specific 8-oxoguanine as a substrate [61,69,70,74]. When incubated with the protein extract, OGG1 activity excised the 8-oxoguanine, and the abasic site thus formed was subsequently cleaved by either the AP endonuclease activity present in the extract, or the AP lyase activity of OGG1. This OGG1-dependent nicking activity was quantified by measuring the amounts of substrate and cleaved product. Although OGG1 was shown to be responsible for most of glycosylase activity against 8-oxoguanine [75], there exist in the extract minor activities that remove this lesion (e.g., NEIL1, as discussed above), and therefore we termed this assay the OGG assay (for the general 8-oxoguanine DNA glycosylase activity) rather than OGG1 assay. A thorough optimization, and detailed reproducibility study established that the OGG assay is reproducible, with an inter-investigator variability of 10%. Analysis of 120 healthy individuals revealed a mean OGG activity of 7.2 U/μg protein, and a distribution range of 2.8-fold from 3.6 to 10.1 U/μg protein, suggesting that individuals at the lower end of this distribution might be predisposed to cancer. Interestingly there was no difference in OGG activity between males and females, and no difference between smokers and non-smokers [73].

A case-control study with 68 non-small cell lung cancer patients and 68 healthy control subjects, frequency matched for age and sex, showed that OGG activity was reduced in non-small cell lung cancer (NSCLC) patients compared to healthy subjects [69]. Gackowski et al., using a similar assay in a study with 51 NSCLC patients and 64 healthy subjects, also found lower OGG activity in the cancer patients [70]. We went further to analyze our results by three logistic regression models, after adjusting for age and smoking status. When groups were divided by medians, the odds ratio was 5.2 (95%

CI 1.9–14.1), with $P = 0.001$; when the groups were divided by tertiles, the odds ratio was 4.8 (95% CI 1.5–15.9), with $P = 0.01$. Using a continuous model, the odds ratio associated with a unit decrease of OGG activity was 1.9 (95% CI 1.3–2.8), with $P < 0.001$. These results suggest that low OGG activity is associated with increased risk of NSCLC, and is independent on smoking [69].

To further examine the biological and epidemiological significance of these results we addressed the two main issues raised above, namely the validity of measurements in a surrogate tissue, and whether reduced OGG activity preceded the onset of the lung cancer. Since the main therapy of NSCLC is surgery, we had an opportunity to compare OGG activity in PBMC and non-cancer tissue from the same individuals. We found a linear correlation between OGG in blood and lung, suggesting that at least for OGG enzymatic activity, PBMC are a valid surrogate for the lung [69]. The question of whether the low OGG activity in NSCLC preceded the onset of cancer cannot be definitively answered in a case-control study; for that, a prospective study is needed. However, we could obtain supporting evidence, by assaying OGG activity in patients from 10 days before surgery, up to over a year after surgery. The prediction was that if OGG activity is an inherent characteristic of an individual regardless of the presence of the tumor, then there should be no difference in OGG activity before or after surgery. However, if low OGG activity was caused by the tumor, as time after surgery passes, the effect of the tumor may weaken, or even disappear, leading to an increase in OGG activity. We found no association between the time of blood specimen withdrawal and time of surgery, suggesting that OGG activity was not affected by the tumor [69,76]. This, of course, is not a definitive proof, since the effect of the tumor (if any) could have been irreversible. However, the fact that OGG values did not change even over a year after surgery, when at least part of the lymphocyte population turned over, is consistent with lack of an effect of the tumor on OGG activity [76]. Definitive proof, however, must await prospective studies. Taken together these results suggest that low OGG activity measured in PBMC is associated with the risk of NSCLC, with the estimated relative risk increasing as OGG activity decreases.

Most interestingly, when reduced OGG activity was combined with smoking, there was a much greater estimated relative risk for NSCLC (Fig. 2),

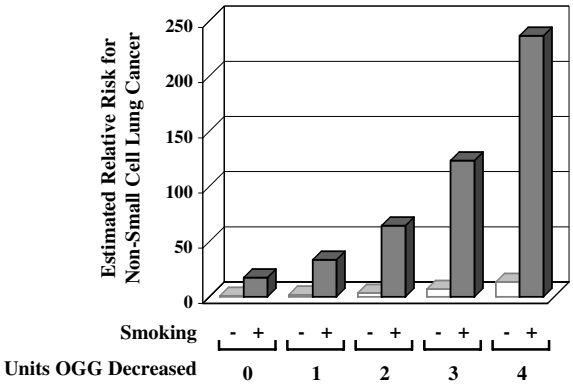

Fig. 2. Estimated relative risk to develop non-small cell lung cancer of smokers with reduced OGG activity. The reference group is of non-smokers, with an OGG activity of 7 U/μg protein. The graph is based on logistic regression analysis with OGG activity as a continuous variable, as presented in Ref. [68].

suggesting that smokers with low OGG activity are highly predisposed to lung cancer [69,77].

We have conducted also a case-control study on the role of OGG activity in head and neck cancer with 37 cases with squamous cell carcinoma of the head and neck (SCCHN), and 93 control subjects matched for age and gender [72]. We found that reduced OGG activity was associated with SCCHN, with an adjusted odds ratio associated with a unit decrease in OGG activity of 2.3 (95% CI 1.5–3.4; $P < 0.0001$). Individuals in the lowest tertile of OGG activity were at increased risk with an odds ratio of 7.0 (95% CI 2.0–24.5; $P = 0.002$). Like in the case of lung cancer, the combination of low OGG activity and smoking caused a much greater risk for SCCHN. To address the question of whether low OGG activity is a risk factor in SCCHN or caused by the cancer, we re-assayed OGG activity in 18 patients who fully recovered from the disease after successful therapy. In all 18 patients, OGG activity values measured 3–4 years after successful treatment were within the 95% CI of the OGG activity values measured at diagnosis [72]. This suggests that the low OGG activity measured at diagnosis was not caused by the presence of the cancer. Rather it represents inherent characteristics in these individuals, and caused increased risk of SCCHN.

In an attempt to examine the origins of the inter-individual variations in OGG activity, we assayed in parallel OGG activity and *OGG1* mRNA expression in the same individuals. Although there was a group trend of increased OGG activity with increased

mRNA expression, correlation at the individual level was poor [73], indicating that mRNA expression cannot be used to predict OGG enzymatic activity. Evidently, factors other than mRNA expression affect OGG activity, such as translation, as well as inhibitors and stimulators, like AP endonuclease, as described above. Notably, also the protein complex XPC-HR23B, which is usually involved in NER, was found to stimulate the activity of OGG1 [78]. This suggests that inter-individual variability in OGG1 activity might be influenced by inter-individual variations in many other cellular components, including AP endonuclease and XPC-HR23B.

5.3. Other methods for measuring repair of oxidative DNA damage

5.3.1. Measuring 8-oxoguanine in genomic DNA

Measuring the steady state of DNA damage reflects the sum of the rates of its formation and repair. The advantage of this method is that it integrates exposure and repair, and thereby offers a 'bottom-line' of the amount of damage in DNA [79–83]. There are, however, two main limitations to this approach. (a) The baseline amount of most types of DNA damage is low, and may be very close to the limit of detection of the analytical method used for its measurement. This causes a rather low signal/noise ratio and potentially introduces large measurement errors. (b) Most studies measure lesions in genomic DNA. Since most DNA is non-coding, this means that lesions are practically measured in non-coding DNA. Since there are heterogeneities in both induction of DNA damage and its repair, measurement in non-coding DNA might yield either irrelevant or misleading results. Notable, DNA repair can preferentially occur in expressed sequences [1], which are likely to be more important in carcinogenesis than non-coding DNA. This can be overcome by using gene-specific measurement of DNA damage [84]. An additional complication is that the surrogate tissue used (usually blood) is not necessarily subjected to the same level of exposure to DNA damaging agents as the target tissue. In the case of 8-oxoguanine, an additional complication is the ease by which routine sample processing causes oxidation of guanine in DNA, thereby further increasing background noise [85]. Still, it was reported that in lung cancer patients who had lower enzymatic activity of OGG than control healthy subjects, had consistently also higher amounts of 8-oxoguanine in their DNA [70].

5.3.2. Expression arrays and proteomics

The availability of high throughput platforms for the simultaneous measurement of expression patterns of most (if not all) genes in the human genome has led to many attempts to use individual expression profiles primarily for detection of cancer and prognosis of treatment. Research is focusing on mRNA expression arrays, proteomics and antibody arrays [86–91]. Obviously, such studies, which address a large number of genes and/or proteins, can provide information also on the role of DNA repair in cancer.

5.3.3. The comet assay

The comet assay measures breaks in chromosomal DNA. Cells embedded in agarose on a microscope slide are lysed with detergent and high salt to form nucleoids. Electrophoresis at high pH results in structures resembling comets, the intensity of the comet tail relative to the head reflects the number of DNA breaks. Specific oxidative DNA damage can be identified by including a step in which the nucleoid DNA is incubated with a lesion-specific endonuclease (e.g., OGG1 for 8-oxoguanine), which increases the number of breaks. This increases the intensity of the comet tail, thereby improving the quantification of the results, which is a weakness of this assay. An advantage of the comet assay is its high sensitivity, and it can be conducted with single cells.

The comet assay was used to measure DNA repair capacity by monitoring the speed by which cells remove lesions, e.g., after exposure of freshly isolated lymphocytes to an oxidative damaging agent such as H_2O_2. However, it should be remembered that the breaks measured represent, in addition to DNA repair, other mechanisms like detoxification that protect the DNA from oxidation. The use of the comet assay for measuring repair of oxidative DNA damage was recently reviewed [92,93].

5.3.4. Host-cell reactivation

The host-cell reactivation (HCR) assay is based on the fact that expression of a damaged gene carried on a plasmid is lower than an intact plasmid. A plasmid carrying a reporter gene is treated with a DNA damaging agent, after which it is used to transfect growing cells in culture. Expressions levels

are measured, and taken to represent the efficiency of DNA repair in the cells [94]. Using this assay with stimulated PBMC it was shown, for example, that the repair of benzo[*a*]pyrene-induced DNA damage was associated with increased risk of lung cancer [95]. The repair of oxidative damage was studies using the HCR assay in cultured cells [96,97], but not in cancer risk studies. Its limitations are that gene expression rather than DNA repair is measured, and being based on transfection of growing cells it is rather complex for large-scale epidemiology studies. In addition, complications may arise when assaying lesions that do not strongly affect transcription.

5.3.5. Mutagen sensitivity

The mutagen sensitivity assay involves measuring the number of chromatid breaks in cultured peripheral blood lymphocytes that were exposed to a mutagen, typically bleomycin. It is based on the assumption that the number of breaks is correlated to the DNA repair capacity of the cells. Perhaps a better correlation of mutagen sensitivity would be to the ability to cope with DNA damage, of which DNA repair is only one component. Other processes that may affect mutagen sensitivity include detoxification, cell cycle and checkpoints, and apoptosis. Mutagen sensitivity was recently comprehensively reviewed [98].

6. Application to cancer prevention

The importance of elucidating the role of oxidative DNA damage repair in cancer is in its potential to provide biomarkers for cancer risk assessment, early detection, and prognosis. Since cancer risk, development, and treatment are all affected by a multiplicity of factors, a critical issue is whether successful clinical implementation will have to rely on a collection of a large numbers of biomarkers, or whether there might exist cases of 'bottleneck' processes, for which a small numbers of biomarkers may suffice. The usage of enzymatic activity as a biomarker has the advantage that it integrates many (dozens, or even more) factors that are known to affect protein expression and activity, including genetic polymorphism, epigenetic effects, transcription factors, splicing, RNA stability, translation factors, protein stability, post-translational modification, and perhaps environmental and life style factors [68,77]. The repair of 8-oxoguanine might in fact be a bottleneck pathway in the development of lung and head and neck cancers, and perhaps other types of cancer [69,72]. This is indicated by the significant estimated relative risk to develop lung cancer of smokers that have low OGG activity (Fig. 2). Such large odds ratios suggest that screening smokers for OGG activity may be used as a powerful tool for cancer prevention. Smokers who are diagnosed with low OGG activity can be advised to enter smoking cessation programs, as a way to reduce cancer risk. Such an approach based on personal susceptibility is expected to be more effective than a general warning on the hazards of smoking, as has been seen in the case of personal risk factors for cardiovascular diseases (e.g., personal cholesterol levels) [99]. Lung cancer prevention programs based on biomarkers such as OGG activity, in combination with other risk factors, may provide an effective mechanism for large-scale efforts to reduce the incidence of lung cancer. In addition, it would be interesting to examine whether supplemental dietary anti-oxidants may have a beneficial anti-cancer effect in individuals with a low ability to repair oxidative DNA damage [100–102]. Anti-oxidants did not protect individuals from lung cancer in a large prospective study [103]. However, most individuals appear to repair very well oxidative DNA damage, and therefore extra protection has apparently no added value. The situation may be different for individuals with a low ability to repair oxidative DNA damage, where anti-oxidants may reduce the amount of DNA damage, thereby easing up the repair load of the weak DNA repair system, and perhaps leading to a reduced cancer risk.

Acknowledgments

This work was supported by grants from FAMRI, the Flight Attendants Medical Research Institute, Florida, USA, the Early Detection Research Network, NCI, NIH USA (CA111219), and the M.D. Moross Institute for Cancer Research at the Weizmann Institute of Science.

References

[1] E.C. Friedberg, G.C. Walker, W. Siede, R.D. Wood, R.A. Schultz, T. Ellenberger, DNA Repair and Mutagenesis, ASM Press, Washington, DC, 2006.
[2] J.H. Hoeijmakers, Genome maintenance mechanisms for preventing cancer, Nature 411 (2001) 366–374.

[3] B. Vogelstein, K.W. Kinzler, Cancer genes and the pathways they control, Nat. Med. 10 (2004) 789–799.
[4] P. Modrich, Mismatch repair, genetic stability, and cancer, Science 266 (1994) 1959–1960.
[5] N. Al-Tassan, N.H. Chmiel, J. Maynard, N. Fleming, A.L. Livingston, G.T. Williams, A.K. Hodges, D.R. Davis, S.S. David, J.R. Sampson, J.P. Cheadle, Inherited variants of MYH associated with somatic G:C → T:A mutations in colorectal tumors, Nat. Genet. 30 (2002) 227–232.
[6] T. Taniguchi, A.D. D'Andrea, Molecular pathogenesis of Fanconi anemia: recent progress, Blood 107 (2006) 4223–4233.
[7] E.C. Friedberg, How nucleotide excision repair protects against cancer, Nat. Rev. Cancer 1 (2001) 22–33.
[8] C. Masutani, R. Kusumoto, A. Yamada, N. Dohmae, M. Yokoi, M. Yuasa, M. Araki, S. Iwai, K. Takio, F. Hanaoka, The XPV (xeroderma pigmentosum variant) gene encodes human DNA polymerase eta, Nature 399 (1999) 700–704.
[9] R.E. Johnson, C.M. Kondratick, S. Prakash, L. Prakash, hRAD30 mutations in the variant form of xeroderma pigmentosum, Science 285 (1999) 263–265.
[10] H. Kasai, P.F. Crain, Y. Kuchino, S. Nishimura, A. Ootsuyama, H. Tanooka, Formation of 8-hydroxyguanine moiety in cellular DNA by agents producing oxygen radicals and evidence for its repair, Carcinogenesis 7 (1986) 1849–1851.
[11] H. Maki, M. Sekiguchi, MutT protein specifically hydrolyses a potent mutagenic substrate for DNA synthesis, Nature 355 (1992) 273–275.
[12] Y. Kuchino, F. Mori, H. Kasai, H. Inoue, S. Iwai, K. Miura, E. Ohtsuka, S. Nishimura, Misreading of DNA templates containing 8-hydroxydeoxyguanosine at the modified base and at adjacent residues, Nature 327 (1987) 77–79.
[13] S. Shibutani, M. Takeshita, A.P. Grollman, Insertion of specific bases during DNA synthesis past the oxidation-damaged base 8-oxodG, Nature 349 (1991) 431–434.
[14] Y.I. Pavlov, D.T. Minnick, S. Izuta, T.A. Kunkel, DNA replication fidelity with 8-oxodeoxyguanosine triphosphate, Biochemistry 33 (1994) 4695–4701.
[15] M. Furuichi, M.C. Yoshida, H. Oda, T. Tajiri, Y. Nakabeppu, T. Tsuzuki, M. Sekiguchi, Genomic structure and chromosome location of the human MutT homologue gene MTH1 encoding 8-oxo-dGTPase for prevention of A:T to G:C transversion, Genomics 24 (1994) 485–490.
[16] K. Fujikawa, H. Kamiya, H. Yakushiji, Y. Fujii, Y. Nakabeppu, H. Kasai, The oxidized forms of dATP are substrates for the human MutT homologue, the hMTH1 protein, J. Biol. Chem. 274 (1999) 18201–18205.
[17] K. Fujikawa, H. Kamiya, H. Yakushiji, Y. Nakabeppu, H. Kasai, Human MTH1 protein hydrolyzes the oxidized ribonucleotide, 2-hydroxy-ATP, Nucl. Acids Res. 29 (2001) 449–454.
[18] T. Ishibashi, H. Hayakawa, M. Sekiguchi, A novel mechanism for preventing mutations caused by oxidation of guanine nucleotides, EMBO Rep. 4 (2003) 479–483.
[19] E. Seeberg, L. Eide, M. Bjoras, The base excision repair pathway, Trends Biochem. Sci. 20 (1995) 391–397.
[20] H.E. Krokan, H. Nilsen, F. Skorpen, M. Otterlei, G. Slupphaug, Base excision repair of DNA in mammalian cells, FEBS Lett. 476 (2000) 73–77.
[21] P. Fortini, E. Dogliotti, Base damage and single-strand break repair: mechanisms and functional significance of short- and long-patch repair subpathways, DNA Repair 6 (2007) 398–409.
[22] S. Boiteux, J.P. Radicella, The human OGG1 gene: structure, functions, and its implication in the process of carcinogenesis, Arch. Biochem. Biophys. 377 (2000) 1–8.
[23] S.D. Bruner, D.P. Norman, G.L. Verdine, Structural basis for recognition and repair of the endogenous mutagen 8-oxoguanine in DNA, Nature 403 (2000).
[24] H.E. Krokan, R. Standal, G. Slupphaug, DNA glycosylases in the base excision repair of DNA, Biochem. J. 325 (1997) 1–16.
[25] J.W. Hill, T.K. Hazra, T. Izumi, S. Mitra, Stimulation of human 8-oxoguanine-DNA glycosylase by AP-endonuclease: potential coordination of the initial steps in base excision repair, Nucl. Acids Res. 29 (2001) 430–438.
[26] V.S. Sidoremko, G.A. Nevinsky, D.O. Zharkov, Mechanism of interaction between human 8-oxoguanine-DNA glycosylase and AP endonuclease, DNA Repair 6 (2007) 317–328.
[27] T.K. Hazra, T. Izumi, I. Boldogh, B. Imhoff, Y.W. Kow, P. Jaruga, M. Dizdaroglu, S. Mitra, Identification and characterization of a human DNA glycosylase for repair of modified bases in oxidatively damaged DNA, Proc. Natl. Acad. Sci. USA 99 (2002) 3523–3528.
[28] T.K. Hazra, A. Das, S. Das, S. Choudhury, Y.W. Kow, R. Roy, Oxidative DNA damage repair in mammalian cells: a new perspective, DNA Repair 6 (2007) 470–480.
[29] H. Dou, S. Mitra, T.K. Hazra, Repair of oxidized bases in DNA bubble structures by human DNA glycosylases NEIL1 and NEIL2, J. Biol. Chem. 278 (2003) 49679–49684.
[30] L. Wiederhold, J.B. Leppard, P. Kedar, F. Karimi-Busheri, A. Rasouli-Nia, M. Weinfeld, A.E. Tomkinson, T. Izumi, R. Prasad, S.H. Wilson, S. Mitra, T.K. Hazra, AP endonuclease-independent DNA base excision repair in human cells, Mol. Cell 15 (2004) 209–220.
[31] J.T. Reardon, T. Bessho, H.C. Kung, P.H. Bolton, A. Sancar, In vitro repair of oxidative DNA damage by human nucleotide excision repair system: possible explanation for neurodegeneration in xeroderma pigmentosum patients, Proc. Natl. Acad. Sci. USA 94 (1997) 9463–9468.
[32] M. Bjoras, L. Luna, B. Johnsen, E. Hoff, T. Haug, T. Rognes, E. Seeberg, Opposite base-dependent reactions of a human base excision repair enzyme on DNA containing 7,8-dihydro-8-oxoguanine and abasic sites, EMBO J. 16 (1997) 6314–6322.
[33] M.L. Michaels, J. Tchou, A.P. Grollman, J.H. Miller, A repair system for 8-oxo-7,8-dihydrodeoxyguanine, Biochemistry 31 (1992) 10964–10968.
[34] M.M. Slupska, W.M. Luther, J.H. Chiang, H. Yang, J.H. Miller, Functional expression of hMYH, a human homolog of the *Escherichia coli* MutY protein, J. Bacteriol. 181 (1999) 6210–6213.
[35] M. Takao, Q.M. Zhang, S. Yonei, A. Yasui, Differential subcellular localization of human MutY homolog (hMYH) and the functional activity of adenine:8-oxoguanine DNA glycosylase, Nucl. Acids Res. 27 (1999) 3638–3644.
[36] M. Moriya, Single-stranded shuttle phagemid for mutagenesis studies in mammalian cells: 8-oxoguanine in DNA induces targeted GC to TA transversions in simian kidney cells, Proc. Natl. Acad. Sci. USA 90 (1993) 1122–1126.

[37] S. Avkin, Z. Livneh, Efficiency, specificity and DNA polymerase-dependence of translesion replication across the oxidative lesion 8-oxoguanine in human cells, Mutat. Res. 510 (2002) 81–90.
[38] A.P. Grollman, M. Moriya, Mutagenesis by 8-oxoguanine: an enemy within, Trends Genet. 9 (1993) 246–249.
[39] T. Ohtsubo, K. Nishioka, Y. Imaiso, S. Iwai, H. Shimokawa, H. Oda, T. Fujiwara, Y. Nakabeppu, Identification of human MutY homolog (hMYH) as a repair enzyme for 2-hydroxyadenine in DNA and detection of multiple forms of hMYH located in nuclei and mitochondria, Nucl. Acids Res. 28 (2000) 1355–1364.
[40] A.R. Parker, J.R. Eshleman, Human MutY: gene structure, protein functions and interactions, and role in carcinogenesis, Cell. Mol. Life Sci. 60 (2003) 2064–2083.
[41] H. Hayashi, Y. Tominaga, S. Hirano, A.E. McKenna, Y. Nakabeppu, Y. Matsumoto, Replication-associated repair of adenine:8-oxoguanine mispairs by MYH, Curr. Biol. 12 (2002) 3350339.
[42] T.T. Ni, G.T. Marsischky, R.D. Kolodner, MSH2 and MSH6 are required for removal of adenine misincorporated opposite 8-oxo-guanine in *S. cerevisiae*, Mol. Cell 4 (1999) 439–444.
[43] C. Colussi, E. Parlanti, P. Degan, G. Aquilina, D. Barnes, P. MacPherson, P. Karran, M. Crescenzi, E. Dogliotti, M. Bignami, The mammalian mismatch repair pathway removes DNA 8-oxodGMP incorporated from oxidized dNTP pool, Curr. Biol. 12 (2002) 912–918.
[44] P. MacPherson, F. Barone, G. Maga, F. Mazzei, P. Karran, M. Bignami, 8-Oxoguanine incorporation into DNA repeats in vitro and mismatch recognition by MutSalpha, Nucl. Acids Res. 33 (2005) 5094–5105.
[45] A. Klungland, S. Bjelland, Oxidative damage to purines in DNA: role of mammalian Ogg1, DNA Repair 6 (2007) 481–488.
[46] T. Tsuzuki, Y. Nakatsu, Y. Nakabeppu, Significance of error-avoiding mechanisms for oxidative DNA damage in carcinogenesis, Cancer Sci. 98 (2007) 465–470.
[47] O. Minowa, T. Arai, M. Hirano, Y. Monden, S. Nakai, M. Fukuda, M. Itoh, H. Takano, Y. Hippou, H. Aburatani, K. Masumura, T. Nohmi, S. Nishimura, T. Noda, Mmh/Ogg1 gene inactivation results in accumulation of 8-hydroxyadenine in mice, Proc. Natl. Acad. Sci. USA 97 (2000) 4156–4161.
[48] A. Klungland, I. Rosewell, S. Hollenbach, E. Larsen, G. Daly, B. Epe, E. Seeberg, T. Lindahl, D.E. Barnes, Accumulation of premutagenic DNA lesions in mice defective in removal of oxidative base damage, Proc. Natl. Acad. Sci. USA 96 (1999) 13,300–13,305.
[49] K. Sakumi, Y. Tominaga, M. Furuichi, P. Xu, T. Tsuzuki, M. Sekiguchi, Y. Nakabeppu, Ogg1 knockout-associated lung tumorigenesis and its suppression by Mth1 gene disruption, Cancer Res. 63 (2003) 902–905.
[50] Y. Xie, H. Yang, C. Cunanan, K. Okamoto, D. Shibata, J. Pan, D.E. Barnes, T. Lindahl, M. McIlhatton, R. Fishel, J.H. Miller, Deficiencies in mouse Myh and Ogg1 result in tumor predisposition and G to T mutations in codon 12 of K-Ras oncogene in lung tumors, Cancer Res. 64 (2004) 3096–3102.
[51] K. Sakamoto, Y. Tominaga, K. Yamauchi, Y. Nakatsu, K. Sakumi, K. Yoshiyama, A. Egashira, S. Kura, T. Yao, M. Tsuneyoshi, H. Maki, Y. Nakabeppu, T. Tsuzuki, MUTYH-null mice are susceptible to spontaneous and oxidative stress-induced intestinal tumorigenesis, Cancer Res. 67 (2007) 6599–6604.
[52] T. Tsuzuki, A. Egashira, H. Igarashi, T. Iwakuma, Y. Nakatsuru, Y. Tominaga, H. Kawate, K. Nakao, K. Nakamura, F. Ide, S. Kura, Y. Nakabeppu, M. Katsuki, T. Ishikawa, M. Sekiguchi, Spontaneous tumorigenesis in mice defective in the MTH1 gene encoding 8-oxo-dGTPase, Proc. Natl. Acad. Sci. USA 98 (2001) 11456–11461.
[53] G. Dianov, C. Bischoff, M. Sunesen, V.A. Bohr, Repair of 8-oxoguanine in DNA is deficient in Cockayne syndrome group B cells, Nucl. Acids. Res. 27 (1999) 1365–1368.
[54] M. Osterod, E. Larsen, F. Le Page, J.G. Hengstler, G.T. van der Horst, S. Boiteux, A. Klungland, B. Epe, A global DNA repair mechanism involving the Cockayne syndrome B (CSB) gene product can prevent the in vivo accumulation of endogenous oxidative DNA base damage, Oncogene 21 (2002) 8232–8239.
[55] B. Vogelstein, K.W. Kinzler, The Genetic Basis of Human Cancer, McGraw-Hill, New York, NY, 1998.
[56] J.P. Cheadle, J.R. Sampson, MUTYH-associated polyposis – from defect in base excision repair to clinical genetic testing, DNA Repair 6 (2007) 274–279.
[57] O.M. Sieber, L. Lipton, M. Crabtree, K. Heinimann, P. Fidalgo, R.K. Phillips, M.L. Bisgaard, T.F. Orntoft, L.A. Aaltonen, S.V. Hodgson, H.J. Thomas, I.P. Tomlinson, Multiple colorectal adenomas, classic adenomatous polyposis, and germ-line mutations in MYH, N. Engl. J. Med. 348 (2003) 791–799.
[58] J. Peto, Cancer epidemiology in the last century and the next decade, Nature 411 (2001) 390–395.
[59] C. Dherin, J.P. Radicella, M. Dizdaroglu, S. Boiteux, Excision of oxidatively damaged DNA bases by the human alpha-hOGG1 protein and the polymorphic alpha-hOGG1-(Ser326/Cys326) protein which is frequently found in human populations, Nucl. Acids Res. 27 (1999) 4001–40007.
[60] J.W. Hill, M.K. Evans, Dimerization and opposite base-dependent catalytic impairment of polymorphic S326C OGG1 glycosylase, Nucl. Acids Res. 34 (2006) 1620–1632.
[61] K. Janssen, K. Schlink, W. Gotte, B. Hippler, B. Kaina, F. Oesch, DNA repair activity of 8-oxoguanine DNA glycosylase I (OGG1) in human lymphocytes is not dependent on genetic polymorphism Ser326/Cys326, Mutat. Res. 486 (2001) 207–216.
[62] L. Luna, V. Rolseth, G.A. Hilrestrand, M. Otterlei, F. Dantzer, M. Bjoras, E. Seeberg, Dynamic relocalization of hOGG1 during the cell cycle is disrupted in cells harboring the hOGG1-Cys326 polymorphic variant, Nucl. Acids Res. 33 (2005) 1813–1824.
[63] R.J. Hung, J. Hall, P. Brennan, P. Boffetta, Genetic polymorphisms in the base excision repair pathway and cancer risk: a HuGE review, Am. J. Epidemiol. 162 (2005) 925–942.
[64] U. Vogel, B.A. Nexo, H. Wallin, K. Overvad, A. Tjonneland, O. Raaschou-Nielsen, No association between base excision repair gene polymorphism and risk of lung cancer, Biochem. Genet. 42 (2004) 453–460.
[65] T. Sakiyama, T. Kohno, S. Mimaki, T. Ohta, N. Yanagitani, T. Sobue, H. Kunitoh, R. Saito, K. Shimizu, C. Hirama, J. Kimura, G. Maeno, H. Hirose, T. Eguchi, D. Saito, M. Ohki, J. Yokota, Association of amino acid

substitution polymorphism in DNA repair genes TP53, POLI, REV1 and LIG4 with lung cancer risk, Int. J. Cancer 114 (2005) 730–737.

[66] X. Wu, J. Gu, H.B. Grossman, C.I. Amos, C. Etzel, M. Huang, Q. Zhang, R.E. Millikan, S. Lerner, C.P. Dinney, M.R. Spitz, Bladder cancer predisposition: a multigenic approach to DNA-repair and cell-cycle-control genes, Am. J. Hum. Genet. 78 (2006) 464–479.

[67] M. Huang, C.P. Dinney, X. Lin, J. Lin, B. Grossman, X. Wu, High-order interactions among genetic variants in DNA base excision repair pathway genes and smoking in bladder cancer susceptibility, Cancer Epidemiol. Biomarkers Prev. 16 (2007) 84–91.

[68] T. Paz-Elizur, D.E. Brenner, Z. Livneh, Interrogating DNA repair in cancer risk assessment, Cancer Epidemiol. Biomarkers Prev. 14 (2005) 1585–1587.

[69] T. Paz-Elizur, M. Krupsky, S. Blumenstein, D. Elinger, E. Schechtman, Z. Livneh, Reduced DNA repair activity for oxidative damage and the risk of lung cancer, J. Natl. Cancer Inst. 95 (2003) 1312–1319.

[70] D. Gackowski, E. Speina, M. Zielinska, J. Kowalewski, R. Rozalski, A. Siomek, T. Paciorek, B. Tudek, R. Olinski, Products of oxidative DNA damage and repair as possible biomarkers of susceptibility to lung cancer, Cancer Res. 63 (2003) 4899–4902.

[71] E. Speina, M. Zielinska, A. Barbin, D. Gackowski, J. Kowalewski, M.A. Graziewicz, J.A. Siedlecki, R. Olinski, B. Tudek, Decreased repair activities of 1,*N*(6)-ethenoadenine and 3,*N*(4)-ethenocytosine in lung adenocarcinoma patients, Cancer Res. 63 (2003) 4351–4357.

[72] T. Paz-Elizur, R. Ben-Yosef, D. Elinger, A. Vexler, M. Krupsky, A. Berrebi, A. Shani, E. Schechtman, L. Freedman, Z. Livneh, Reduced repair of the oxidative 8-oxoguanine DNA damage and the risk of head and neck cancer, Cancer Res. 66 (2006) 11683–11689.

[73] T. Paz-Elizur, D. Elinger, Y. Leitner-Dagan, S. Blumenstein, M. Krupsky, A. Berrebi, E. Schechtman, Z. Livneh, Development of an enzymatic DNA repair assay for molecular epidemiology studies: distribution of OGG activity in healthy individuals, DNA Repair 6 (2007) 45–60.

[74] M.H. Chung, H. Kasai, D.S. Jones, H. Inoue, H. Ishikawa, E. Ohtsuka, S. Nishimura, An endonuclease activity of *Escherichia coli* that specifically removes 8-hydroxyguanine residues from DNA, Mutat. Res. 254 (1991) 1–12.

[75] Y. Monden, T. Arai, M. Asano, E. Ohtsuka, H. Aburatani, S. Nishimura, Human MMH (OGG1) Type 1a protein is a major enzyme for repair of 8-hydroxyguanine lesions in human cells, Biochem. Biophys. Res. Commun. 258 (1999) 605–610.

[76] T. Paz-Elizur, D. Elinger, S. Blumenstein, M. Krupsky, E. Schechtman, Z. Livneh, Novel molecular targets for risk identification: DNA repair enzyme activities, Cancer Biomarkers 3 (2007) 129–133.

[77] T. Paz-Elizur, M. Krupsky, D. Elinger, E. Schechtman, Z. Livneh, Repair of the oxidative DNA damage 8-oxoguanine as a biomarker for lung cancer risk, Cancer Biomarkers 1 (2005) 201–205.

[78] M. D'Errico, E. Parlanti, M. Teson, B.M. de Jesus, P. Degan, A. Calcagnile, P. Jaruga, M. Bjoras, M. Crescenzi, A.M. Pedrini, J.M. Egly, G. Zambruno, M. Stefanini, M. Dizdaroglu, E. Dogliotti, New functions of XPC in the protection of human skin cells from oxidative damage, EMBO J. 25 (2006) 4305–4315.

[79] P.B. Farmer, Exposure biomarkers for the study of toxicological impact on carcinogenic processes, IARC Sci. Publ. 157 (2004) 71–90.

[80] M. Sorensen, H. Autrup, P. Moller, O. Hertel, S.S. Jensen, P. Vinzents, L.E. Knudsen, S. Loft, Linking exposure to environmental pollutants with biological effects, Mutat. Res. 544 (2003) 255–271.

[81] H. Bartsch, J. Nair, R.W. Owen, Exocyclic DNA adducts as oxidative stress markers in colon carcinogenesis: potential role of lipid peroxidation, dietary fat and antioxidants, Biol. Chem. 383 (2002) 915–921.

[82] P. Vineis, F. Perera, DNA adducts as markers of exposure to carcinogens and risk of cancer, Int. J. Cancer 88 (2001) 325–328.

[83] L.J. Marnett, Oxyradicals and DNA damage, Carcinogenesis 21 (2000) 361–370.

[84] R.M. Anson, P.A. Mason, V.A. Bohr, Gene-specific and mitochondrial repair of oxidative DNA damage, Methods Mol. Biol. 314 (2006) 155–181.

[85] M. Dizdaroglu, Facts about the artifacts in the measurement of oxidative DNA base damage by gas chromatography-mass spectrometry, Free Radic. Res. 29 (1998) 551–563.

[86] B.B. Haab, Applications of antibody array platforms, Curr. Opin. Biotechnol. 17 (2006) 415–421.

[87] P. Maruvada, W. Wang, P.D. Wagner, S. Srivastava, Biomarkers in molecular medicine: cancer detection and diagnosis, Biotechniques (Suppl.) (2005) 9–15.

[88] C. Gulmann, K.M. Sheehan, E.W. Kay, L.A. Liotta, E.F.r. Petricoin, Array-based proteomics: mapping of protein circuitries for diagnostics, prognostics, and therapy guidance in cancer, J. Pathol. 208 (2006) 595–606.

[89] C. Sears, S.A. Armstrong, Microarrays to identify new therapeutic strategies for cancer, Adv. Cancer Res. 96 (2007) 51–74.

[90] M. Chatterjee, A. Ionan, S. Draghici, M.A. Tainsky, Epitomics: global profiling of immune response to disease using protein microarrays, OMICS 10 (2006) 499–506.

[91] N. Murphy, E. Millar, C.S. Lee, Gene expression profiling in breast cancer: towards individualising patient management, Pathology 37 (2005) 271–277.

[92] A.R. Collins, The comet assay. Principles, applications, and limitations, Methods Mol. Biol. 203 (2002) 163–177.

[93] A.R. Collins, I. Gaivao, DNA base excision repair as a biomarker in molecular epidemiology studies, Mol. Aspects Med. 28 (2007) 307–322.

[94] W.F. Athas, M.A. Hedayati, G.M. Matanoski, E.R. Farmer, L. Grossman, Development and field-test validation of an assay for DNA repair in circulating human lymphocytes, Cancer Res. 51 (1991) 5786–5793.

[95] Q. Wei, L. Cheng, C.I. Amos, L.-E. Wang, Z. Guo, W.K. Hong, M.R. Spitz, Repair of tobacco carcinogen-induced DNA adducts and lung cancer risk: a molecular epidemiologic study, J. Natl. Cancer Inst. 92 (2000) 1764–1772.

[96] G. Spivak, P.C. Hanawalt, Host cell reactivation of plasmids containing oxidative DNA lesions is defective in Cockayne syndrome but normal in UV-sensitive syndrome fibroblasts, DNA Repair 5 (2006) 13–22.

[97] P. Pitsikas, D. Lee, A.J. Rainbow, Reduced host cell reactivation of oxidative DNA damage in human cells

deficient in the mismatch repair gene hMSH2, Mutagenesis 22 (2007) 235–243.

[98] X. Wu, J. Gu, M.R. Spitz, Mutagen sensitivity: a genetic predisposition factor for cancer, Cancer Res. 67 (2007) 3493–3495.

[99] E.S. Ford, U.A. Ajani, J.B. Croft, J.A. Crichley, D.R. Labarthe, T.E. Kottke, W.H. Giles, S. Capewell, Explaining the decrease in US deaths from coronary disease, 1980–2000, N. Engl. J. Med. 356 (2007) 2388–2398.

[100] A.R. Collins, V. Harrington, J. Drew, R. Melvin, Nutritional modulation of DNA repair in human intervention study, Carcinogenesis 24 (2003) 511–515.

[101] S.B. Astley, R.M. Elliott, D.B. Archer, S. Southon, Evidence that dietary supplementation with carotenoids and carotenoid-rich foods modulates the DNA damage:repair balance in human lymphocytes, Br. J. Nutr. 91 (2004) 63–72.

[102] P. Moller, S. Loft, Interventions with antioxidants and nutrients in relation to oxidative DNA damage and repair, Mutat. Res. 551 (2004) 79–89.

[103] G.S. Omenn, Chemoprevention of lung cancers: lessons from CARET, the beta-carotene and retinol efficacy trial, and prospects for the future, Eur. J. Cancer Prev. 16 (2007) 184–191.